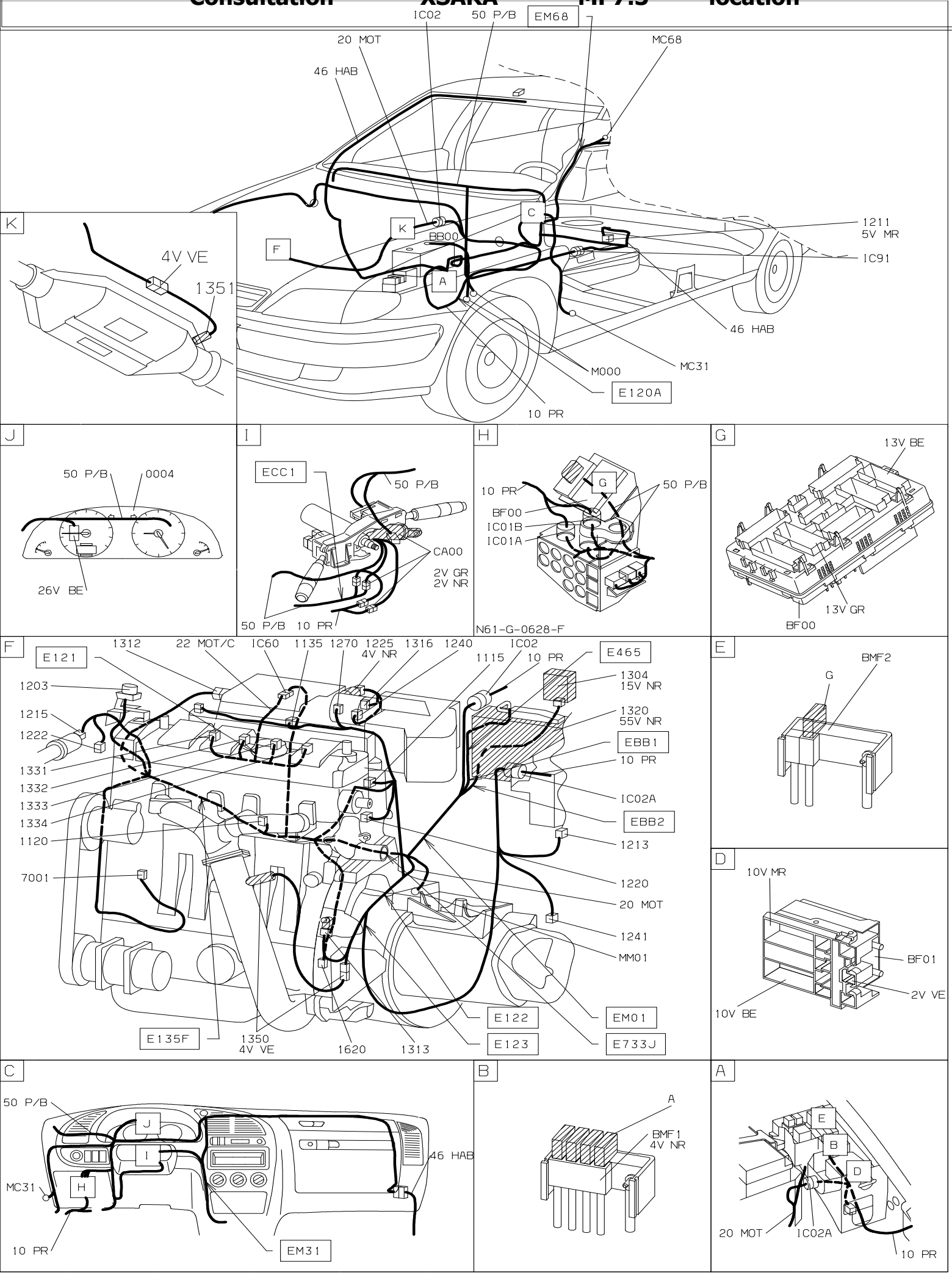Consultation XSARA MP7.3 location